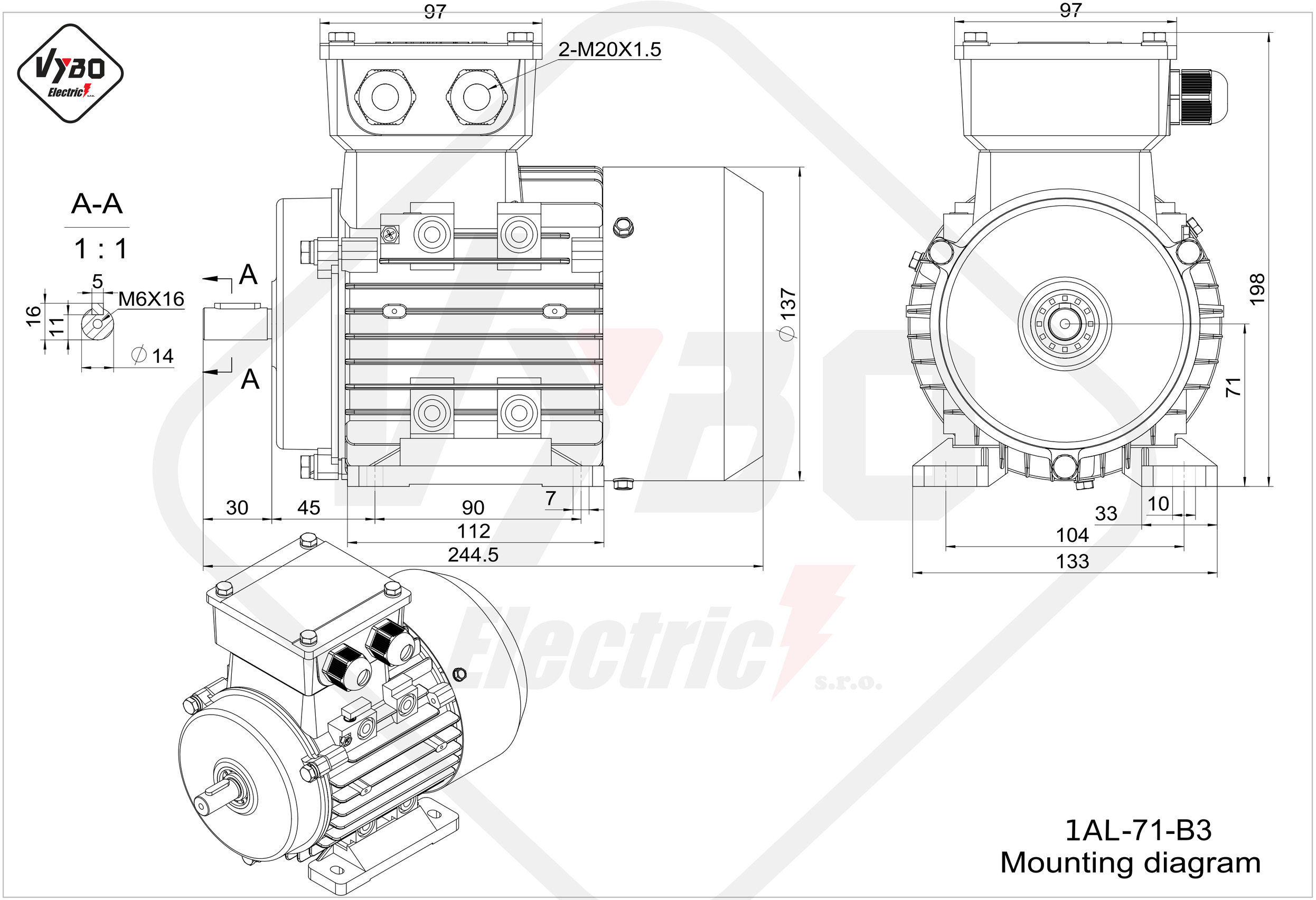

1AL-71-B3
Mounting diagram